Masszeichnung

Elektro-Kochkessel EVO 900 **EK9 / 60L-I-P-S**

[Art. 406392233]

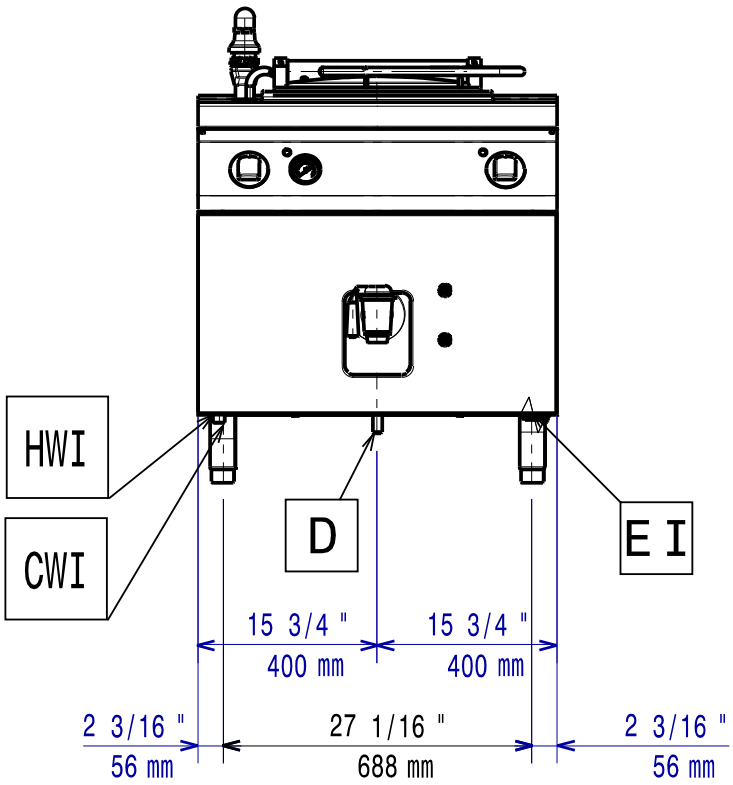

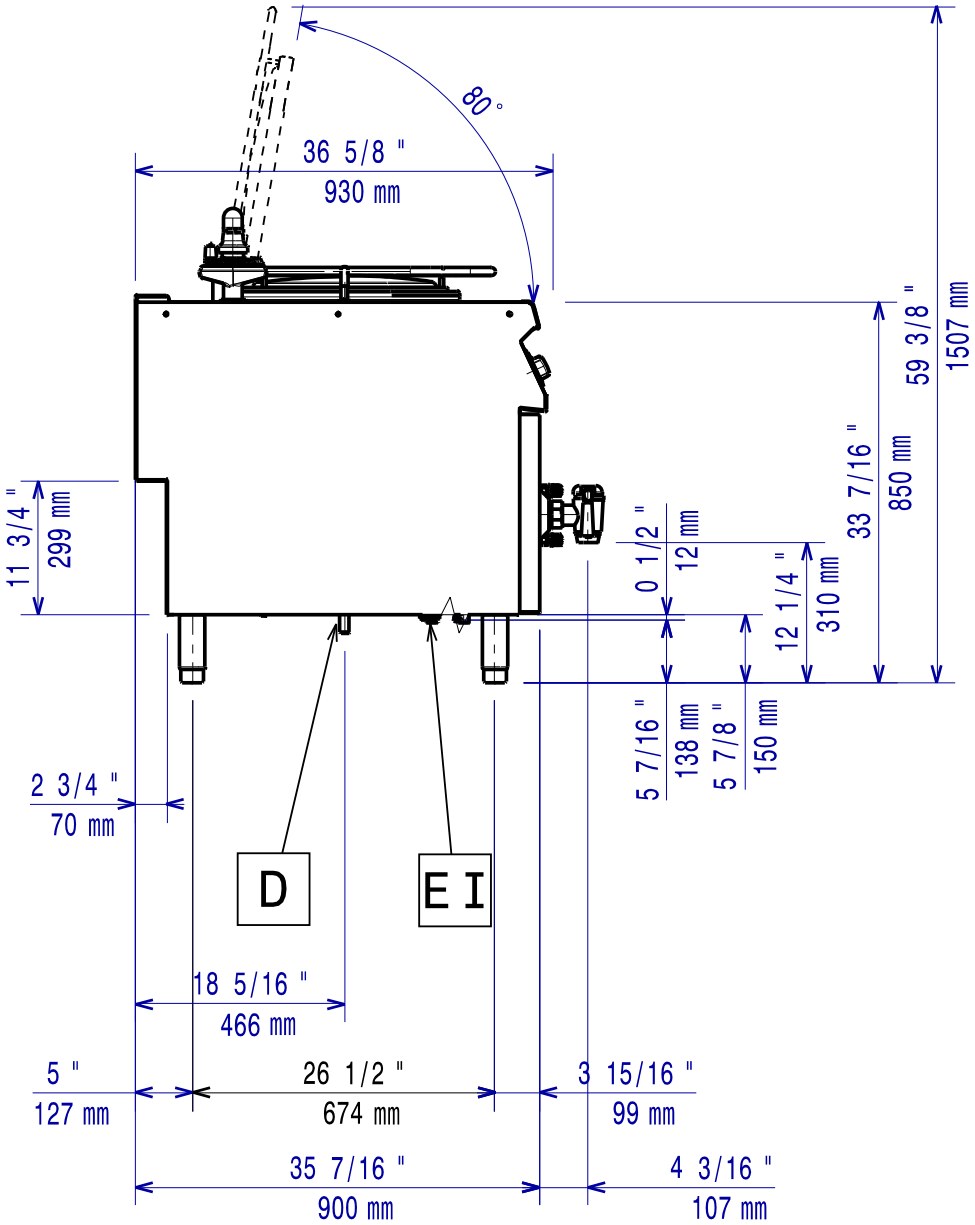

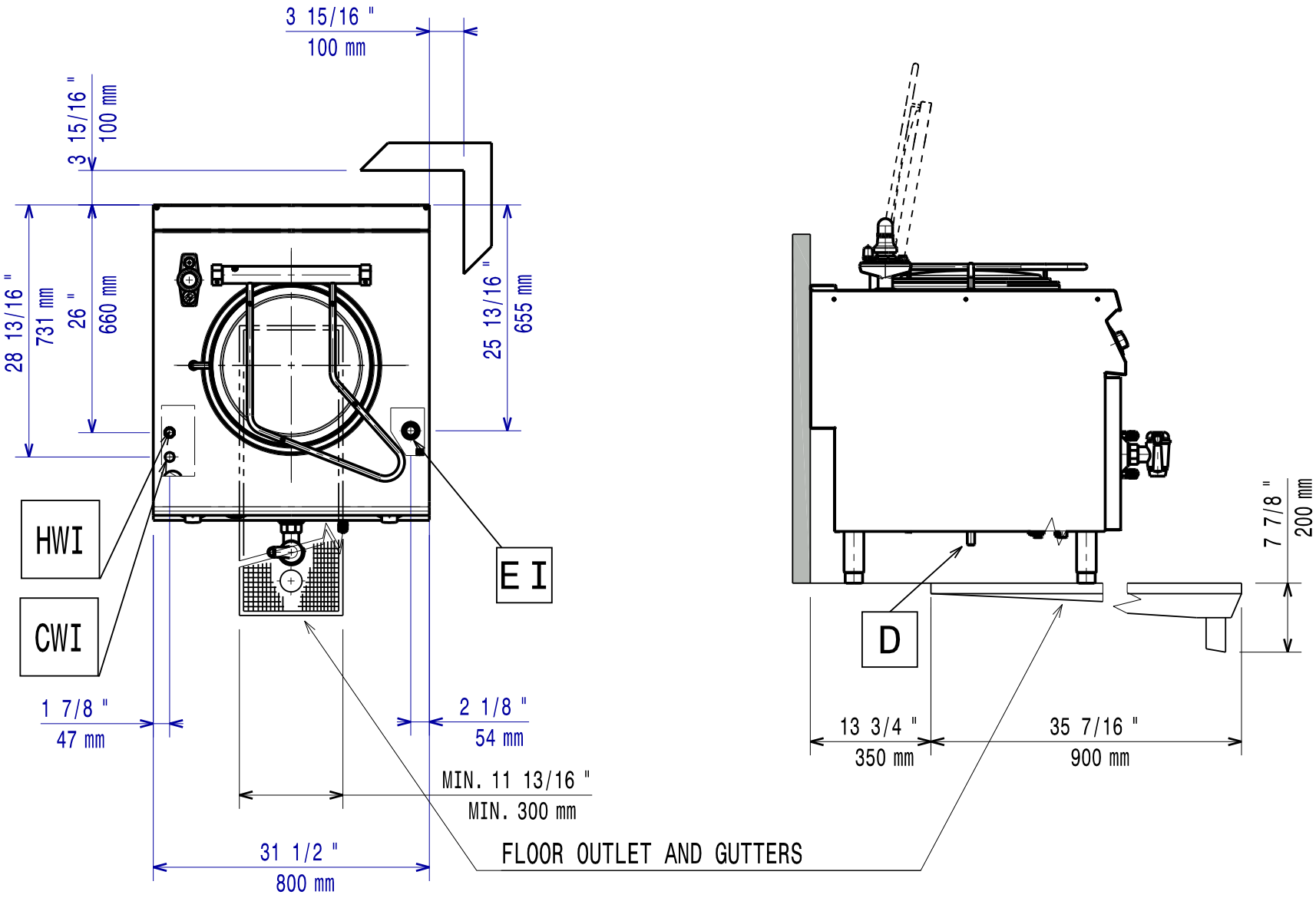
3 15/16 "
100 mm
3 15/16 "
100 mm
28 13/16 "
731 mm
26 "
660 mm
25 13/16 "
655 mm
HWI
CWI
E I
1 7/8 "
47 mm
2 1/8 "
54 mm
MIN. 11 13/16 "
MIN. 300 mm
31 1/2 "
800 mm
FLOOR OUTLET AND GUTTERS
D
7 7/8 "
200 mm
13 3/4 "
350 mm
35 7/16 "
900 mm