Masszeichnung

Flockeneisbereiter **SP 1205 L / W**

[Art. 41321200001] / [Art. 41321200002]

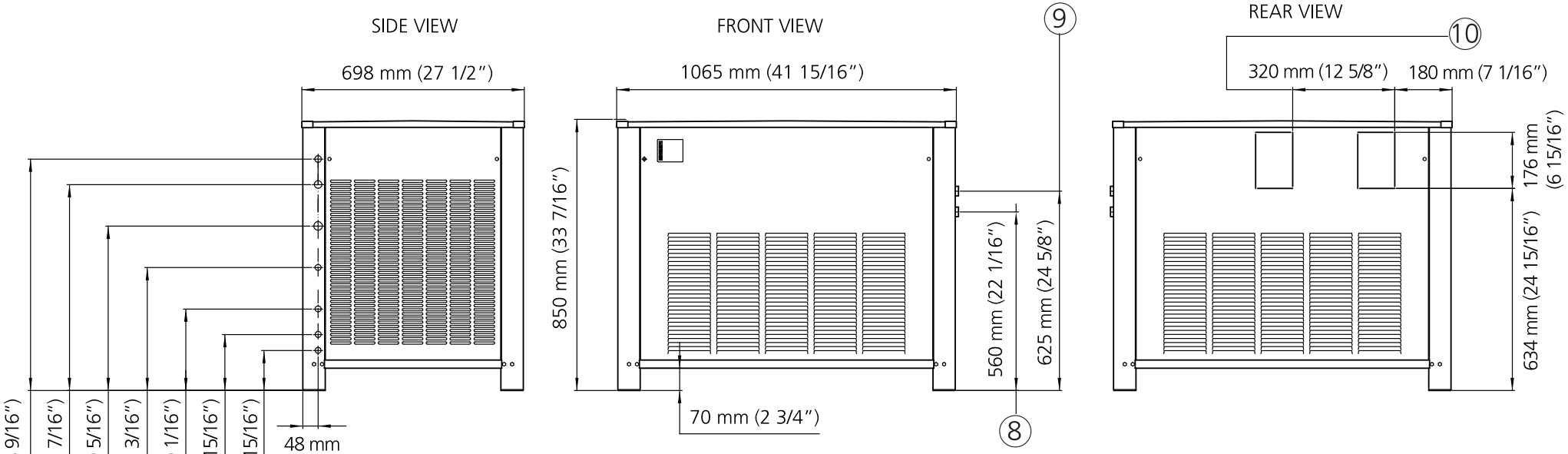
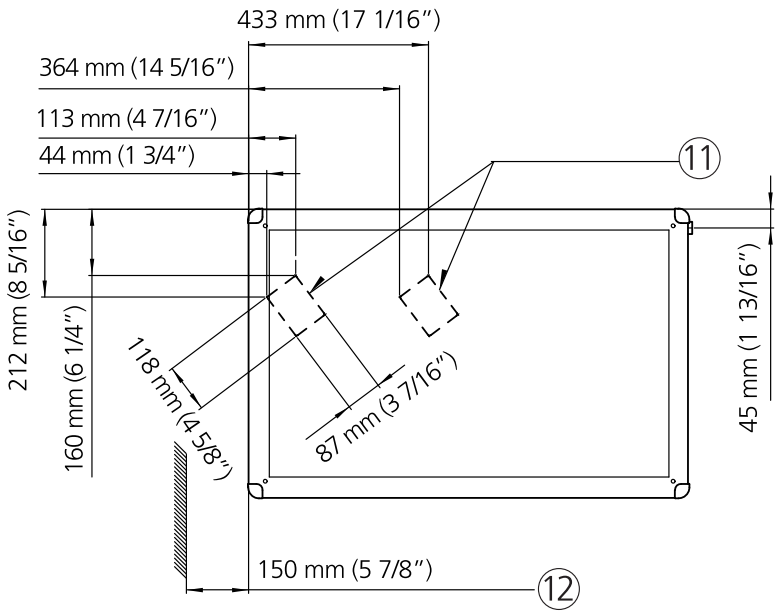
1. CORD SET REMOTE CONDENSER
2. CORD SET
3. 3/4" GAS WATER INLET
4. 3/4" GAS WATER INLET WATER COOLED ONLY
5. 3/4" GAS WATER OUTLET WATER COOLED ONLY
6. 3/4" GAS WATER OUTLET
7. 3/4" GAS OVERFLOW DRAIN
8. LIQUID-ONLY ON AIR COOLED REMOTE CONDENSER
9. GAS-ONLY ON AIR COOLED REMOTE CONDENSER
10. ICE EXIT BACK SIDE
11. ICE EXIT BOTTOM SIDE